IBC

Better Boilers

ibcboiler.com ibcboiler.com ibcboiler.com ibcboiler.com ibcboiler.com

HC Series

HC 13-50	13,500 to	51,000 BTU/HR
HC 23-84	23,000 to	84,000 BTU/HR
HC 29-106	29,000 to	106,000 BTU/HR
HC 20-125	20,000 to	125,000 BTU/HR
HC 33-160	33,000 to	160,000 BTU/HR

Condensing Boiler

IBC's smallest ever boiler, the HC series begins with the HC 13-50 offering the solution for todays better insulated buildings. With onboard full outdoor reset and a slim boiler room footprint the HC Series offers great value for money without sacrificing reliability.

- Unique and innovative single pass Copper / Aluminum heat exchanger, ensuring greater efficiency and eliminating water side corrosion.
- Up to 95% AFUE, with full ASME-rated vessel.
- Built-in boiler pump.
- PVC/CPVC/PPs approved.
- 2" & 3" venting options available.
- Contractor friendly, easy to install, maintain and service.
- Fewer parts ensuring greater reliability.
- Outdoor reset technology increases efficiency by lowering the water temp automatically.
- Reset heating - Set point - DHW.
- Includes Air Vent, Outdoor Sensor & Relief Valve.
- Better reliability and durability.

C US ENERGY STAR H AHRI CERTIFIED www.ahridirectory.org

Energy Efficient Heating

IBC Better Boilers

HC Series

13,500 to 51,000 BTU/HR 23,000 to 84,000 BTU/HR
29,000 to 106,000 BTU/HR 20,000 to 125,000 BTU/HR
33,000 to 160,000 BTU/HR

Condensing Boiler

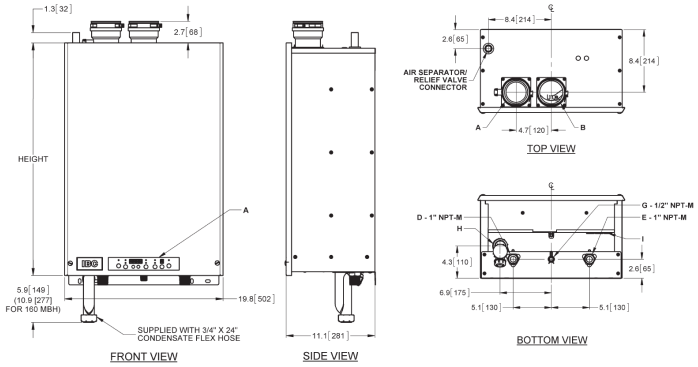

HEIGHT	HC SERIES
HC 13-50	26.6" / 676mm
HC 23-84	26.6" / 676mm
HC 29-106	29.0" / 736mm
HC 20-125	31.3" / 796mm
HC 33-160	31.3" / 796mm

	DESCRIPTION	HC SERIES
A	Exhaust outlet	3" Schedule 40
B	Combustion air	3" Schedule 40
E	Heating water inlet (return)	1" Male NPT
F	Heating water outlet (supply)	1" Male NPT
G	Gas inlet	1/2" Male NPT
H	Condensate outlet	3/4" Hose
I	Knock-outs (3)	1/2"

Connections

SURFACE	DISTANCE FROM COMBUSTIBLE SURFACES	RECOMMENDED DISTANCE FOR INSTALLATION AND SERVICE
Front	2"	24"
Rear	0"	0"
Left side	1.5"	6" (labels may be difficult to read with reduced clearance)
Right side	4"	6" (labels may be difficult to read with reduced clearance)
Top	2"	24"
Bottom	8"	24"

Clearance from boiler cabinet

SPECIFICATIONS	HC 13-50	HC 23-84	HC 29-106	HC 20-125	HC 33-160
CSA Input (Natural Gas or Propane *) – MBH	13.5 – 51	23 – 84	29.0 – 106	20 – 125	33 – 160
CSA Input (Natural Gas or Propane *) – KW	3.95 – 14.94	6.7 – 24.9	8.4 – 31.0	5.6 – 36.6	9.7 – 46.9
CSA Output – MBH	12.4 – 45.4	21.2 – 74.8	26.7 – 94.3	18.6 – 110.8	30.4 – 140.0
CSA Output - KW	3.64 – 13.3	6.2 – 21.9	7.7 – 27.6	5.4 – 32.5	8.9 – 41.0
A.F.U.E	95%	94%	94%	95%	94%
Min gas pressure (Nat. Gas or Propane) – inch w.c.	5	5	5	5	5
Max gas pressure (Nat. Gas or Propane) – inch w.c.	14	14	14	14	14
Power (120Vac/60Hz) - Watts @ full fire with internal pump	126	126	128	130	164
Weight (empty) – lbs/Kg	85 / 39	85 / 39	85 / 39	85 / 39	85 / 39
Pressure vessel water content – USG/Liters	0.37/1.4	0.37/1.4	0.37/1.4	0.5/1.9	0.5/1.9
Max boiler flow rate - USgpm	9	9	10	11	11
Min boiler flow rate - USgpm	2	2	3	3	3
Max operating pressure – Space Heating Coil - psig	43.5	43.5	43.5	43.5	43.5
Approved installation altitude - ASL	0 - 12,000 ft	0 - 12,000 ft	0 - 12,000 ft	0 - 12,000 ft	0 - 12,000 ft
Ambient temperature – Low (°F/°C)	32/0	32/0	32/0	32/0	32/0
Ambient temperature – High (°F/°C)	122/50	122/50	122/50	122/50	122/50
Max relative humidity (non-condensing)	90%	90%	90%	90%	90%
Min water temperature - Space Heating (°F/°C)	50/10	50/10	50/10	50/10	50/10
Max water temperature – Space Heating (°F/°C)	194/90	194/90	194/90	194/90	194/90
Max equivalent vent length 2" (each side)	35'	35'	35'	35'	35'
Max equivalent vent length 3" (each side)	120'	120'	120'	120'	120'

Natural Gas boilers require a Propane conversion kit to be ordered separately if converting from Natural Gas to Propane.
Propane boilers require a Natural Gas conversion kit to be ordered separately if converting from Propane to Natural Gas.

Boilers are shipped with 30 psi pressure relief valve.

EXHAUST PIPE SIZE	MAXIMUM EQUIVALENT LENGTH
Sched.40; Rigid PPs	(each side)
2"	35'
3"	120'
2"/3" 90° Long sweep vent elbow	Allow 5' equivalent feet
2"/3" 90° Short sweep vent elbow	Allow 8' equivalent feet
2"/3" 45° Vent elbow	Allow 3' equivalent feet
PPS	
PPs 87-90'Elbow	Allow 8' equivalent feet
Flexible PPs	
3" Flexible	35 Actual feet

Maximum exhaust venting length

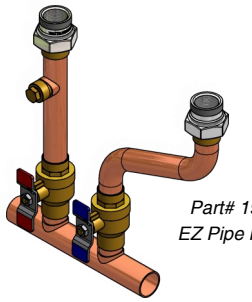

Part# 190-149
EZ Pipe Manifold

Canada 8015 North Fraser Way, Burnaby, BC V5J 5M8 Tel: 604 877 0277 Fax: 604 877 0295
Unit 5, 1455 16th Ave, Richmond Hill, ON L4B 4W5 Tel: 905 918 0113 Fax: 604 877 0277
USA 4507 South Taylor Drive, Sheboygan, WI 53081 Tel: 920 783 8340 Fax: 920 783 8339
Unit 1, 1100 Taylors Lane, Cinnaminson, NJ 08077 Tel: 856 887 0544 Fax: 856 735 5584

www.ibcboiler.com
Toll Free: 1 844 HEAT IBC (432 8422)

900-101 R4 Sept 6th 2017